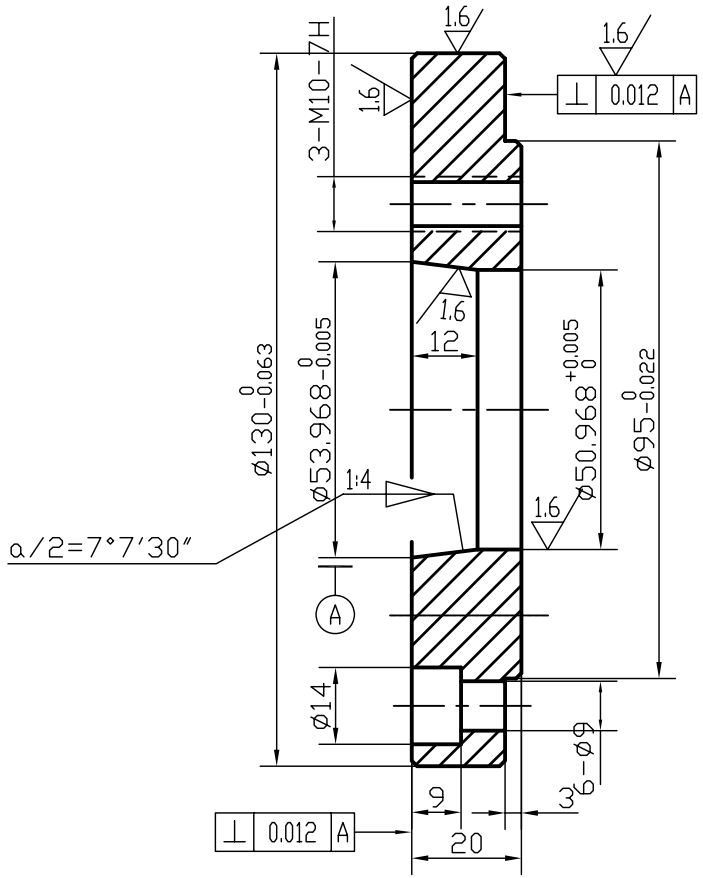

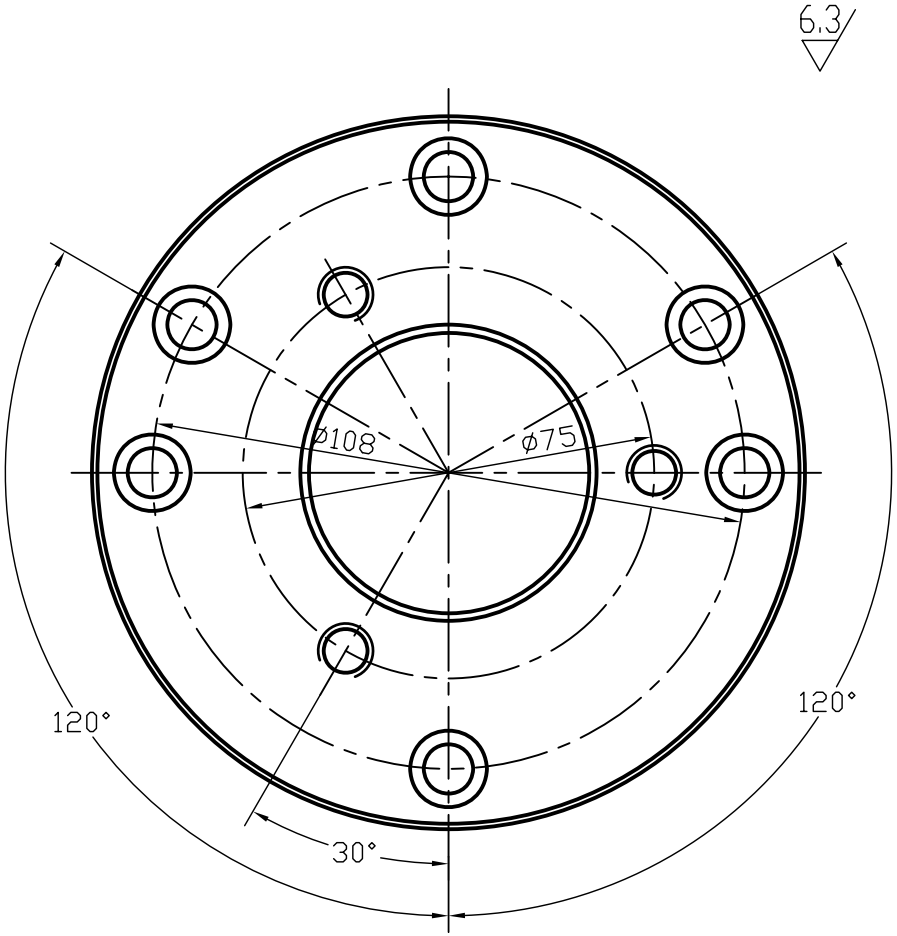

				Designed by	Verif. by	Approval date	Filename	Date 10/04/2003	
				OPTIMUM MASCHINEN - GERMANY			jaw chuck flange 130mm		
				Dr.-Robert-Pfleger-Str. 26					
Ind.	Modification	Day	Name	D-96103 Hallstadt			3441312	Edition 1	Sheet 1 of 1