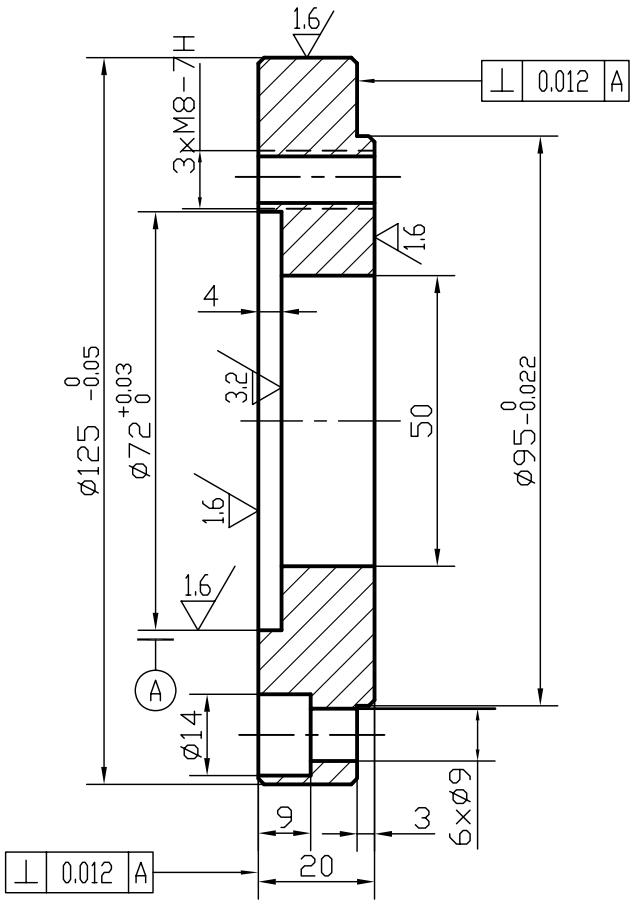

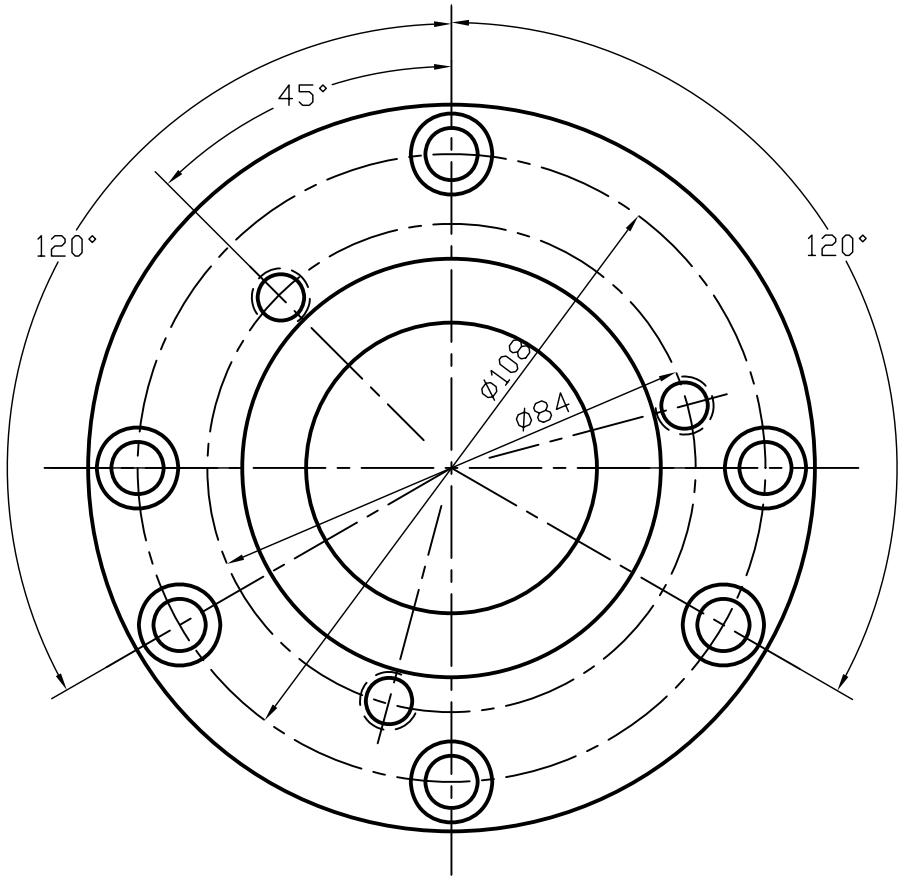

Ind.	Modification	Day	Name

Designed by	Verif. by	Approval date	Filename	Date 10/04/2003

OPTIMUM
MASCHINEN - GERMANY
Dr.-Robert-Pfleger-Str. 26
D-96103 Hallstadt

jaw chuck flange 125mm

3440313	Edition 1	Sheet 1 of 1